National Higher School of Autonomous Systems Technology

Academic year : 2024/2025

Vibrations and waves

By Dr. Malek ZENAD and Dr. Intissar DJOUADA

Chapter 4 : Forced vibration of damped single degree of freedom systems

$$\frac{d}{dt}\left(\frac{\partial(L)}{\partial\dot{q}}\right)-\frac{\partial(L)}{\partial q}+\frac{\partial D}{\partial\dot{q}}=\vec{F}_{ext}\cdot\frac{\partial\vec{r}}{\partial q}$$

Contents

1- Types of exitation

2- Equation of motion of three types of exitation

3- Resonance

4- Power delivered and power absorbed

1- Types of exitation

- We will consider three types of exitation:

1- External forcing

Models the system which has a time varying force acting on it

- ✓ *Example*: Structure subjected to wave

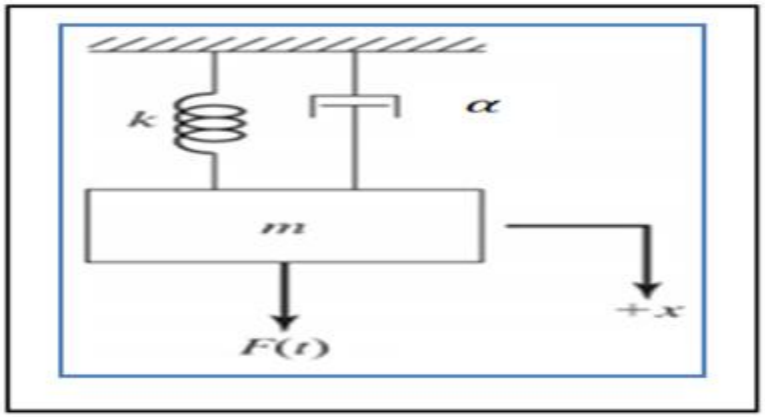

2- Displacement excitation (Base excitation)

This system models the vibration isolation system. The base of the spring is given a prescribed motion, causing the mass to vibrate.

- ✓ *Example*: can be used to model a vehicle suspension system, or the earthquake response of a structure.

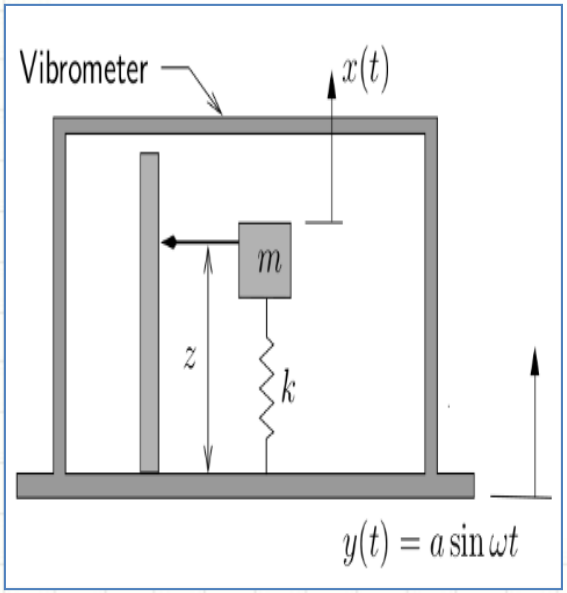

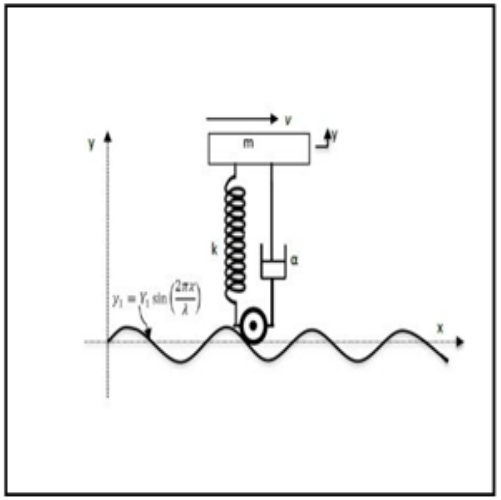

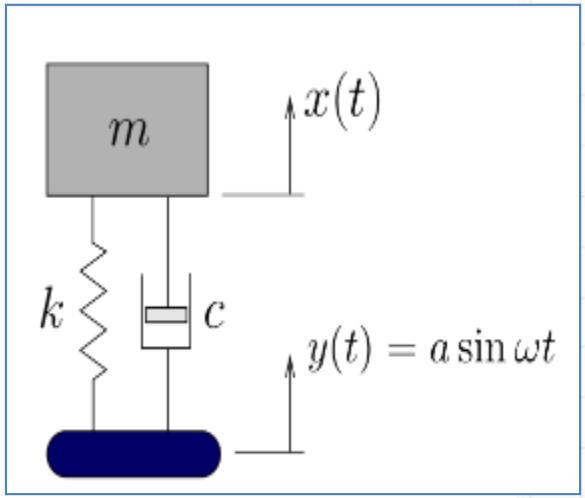

3- Unbalanced rotating (Rotor excitation)

Models the effect of a rotating machine mounted on a flexible floor. a small mass rotates at constant angular velocity, causing the mass *m* to vibrate.

- ✓ *Example*: electric motor , compressor , washing machine …

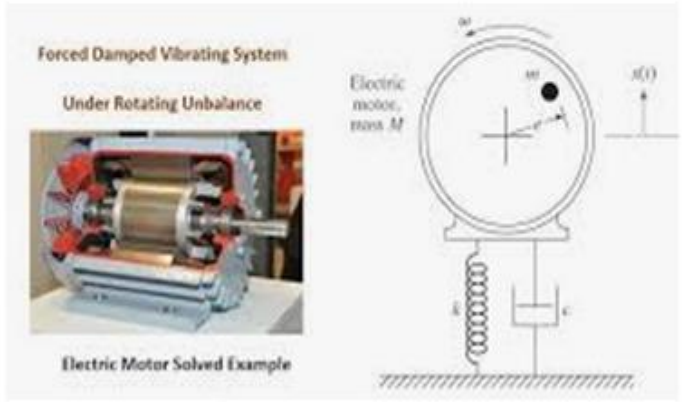

Note

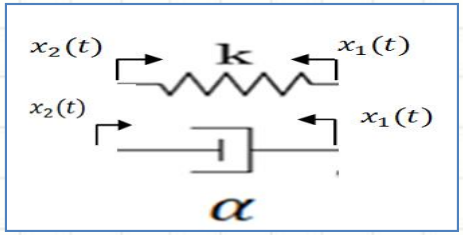

$$\begin{cases} U = \frac{1}{2}k(x_1 + x_2)^2 \\ D = \frac{1}{2}\alpha(\dot{x}_1 + \dot{x}_2)^2 \end{cases}$$

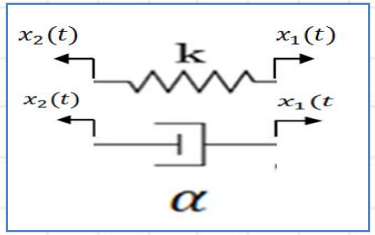

$$\begin{cases} U = \frac{1}{2}k(x_1 + x_2)^2 \\ D = \frac{1}{2}\alpha(\dot{x}_1 + \dot{x}_2)^2 \end{cases}$$

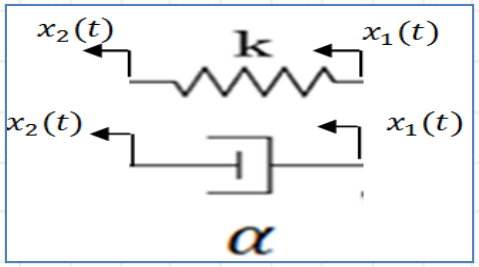

$$\begin{cases} U = \frac{1}{2}k(x_1 - x_2)^2 \\ D = \frac{1}{2}\alpha(\dot{x}_1 - \dot{x}_2)^2 \end{cases}$$

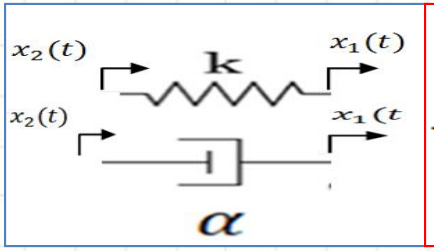

$$\begin{cases} U = \frac{1}{2}k(x_1 - x_2)^2 \\ D = \frac{1}{2}\alpha(\dot{x}_1 - \dot{x}_2)^2 \end{cases}$$

1- Equation of motion

a-External forcing

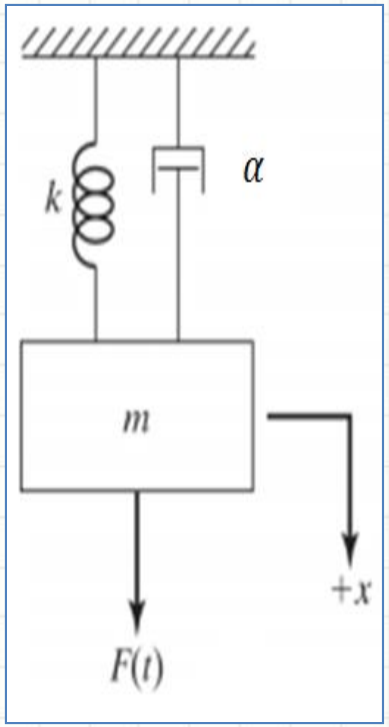

$$F_{ext} = F_0 \sin \Omega t$$

$$T = \frac{1}{2} m\dot{x}^2 \quad , \quad U = \frac{1}{2} kx^2 + cte \quad , \quad D = \frac{1}{2} \alpha \dot{x}^2$$

$$L = T - U \quad \Rightarrow \quad L = \frac{1}{2} m\dot{x}^2 - \frac{1}{2} kx^2$$

- In the case external force $\vec{F}_{ext,}$ acting on a system that is subject to viscous friction, the Lagrange equation can be written in the form:

$$\frac{d}{dt}\left(\frac{\partial(L)}{\partial \dot{q}}\right) - \frac{\partial(L)}{\partial q} + \frac{\partial D}{\partial \dot{q}} = F_{eq}$$

Where

$$F_{eq} = \vec{F}_{ext} \cdot \frac{\partial \vec{r}}{\partial q}$$

1- Equation of motion

a-External forcing

$$\frac{d}{dt}\left(\frac{\partial(L)}{\partial \dot{q}}\right)-\frac{\partial(L)}{\partial q}+\frac{\partial D}{\partial \dot{q}}=\vec{F}_{ext}\cdot\frac{\partial \vec{r}}{\partial q} \quad \Rightarrow \quad \frac{d}{dt}\left(\frac{\partial(L)}{\partial \dot{x}}\right)-\frac{\partial(L)}{\partial x}+\frac{\partial D}{\partial \dot{x}}=\vec{F}_{ext}\cdot\frac{\partial \vec{r}}{\partial x}$$

$$\Rightarrow \quad \frac{d}{dt}\left(\frac{\partial(L)}{\partial \dot{x}}\right)-\frac{\partial(L)}{\partial x}+\frac{\partial D}{\partial \dot{x}}=F_{ext} \quad \Rightarrow \quad m\ddot{x}+\alpha\dot{x}+kx=F_0\sin\Omega t$$

$$\ddot{x}+\frac{\alpha}{m}\dot{x}+\frac{k}{m}x=\frac{F_0}{m}\sin\Omega t \quad \Rightarrow \quad \ddot{x}+2\delta\dot{x}+w_n{}^2x=\frac{F_0}{m}\sin\Omega t$$

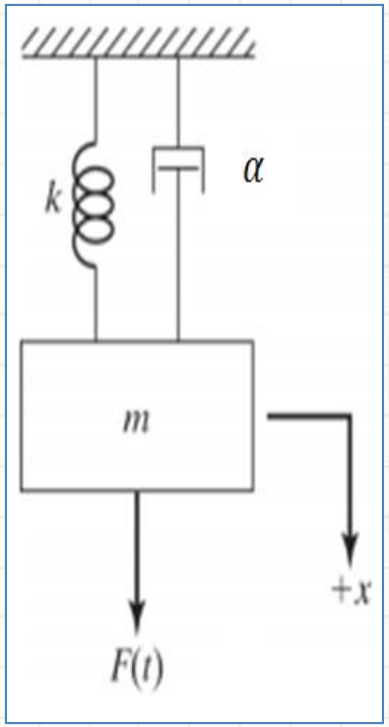

1- Equation of motion

a-External forcing

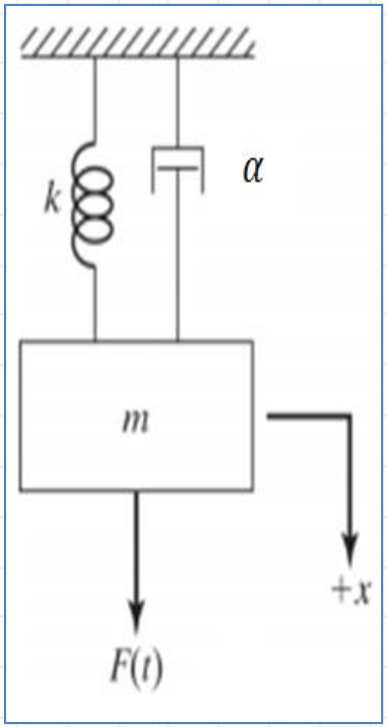

Where:

$\omega_n = \sqrt{\frac{k}{m}}$ The natural frequency of the system.

$\delta = \frac{\alpha}{2m}$ Damping factor

- This equation is nonhomogeneous, its general solution $x(t)$ is given by the sum of the homogeneous solution, $x_h(t)$, and the particular solution, $x_p(t)$

$$x(t) = x_h(t) + x_p(t)$$

1- Equation of motion

a-External forcing

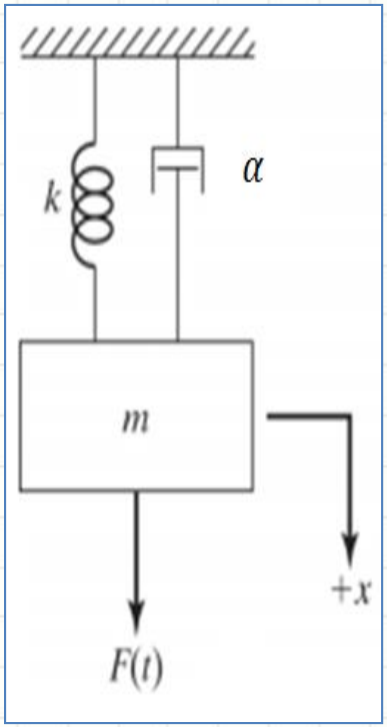

- The homogeneous solution represent the free vibration of the system, that dies out with time under each of the three possible conditions of damping (underdamping, critical damping, and overdamping) and under all possible initial conditions.

$$\begin{cases} x(t) = e^{-\delta t}\left(Ae^{r_1 t} + Be^{-r_2 t}\right) \\ x(t) = e^{-\delta t}\left(A + Bt\right) \\ x(t) = Ae^{-\delta t}\cos\left(w_d t + \varphi\right) \end{cases}$$

$e^{-\delta t} \rightarrow 0 \Rightarrow x(t)$ becomes $x_p(t)$ after some time.

$x(t) \approx x_p(t) \quad \Rightarrow \quad x(t) = A\sin(\Omega t + \varphi)$

1- Equation of motion

a-External forcing

- In forced vibrations, we neglect the transient response of the system, and calculate only the steady state (permanent) response.

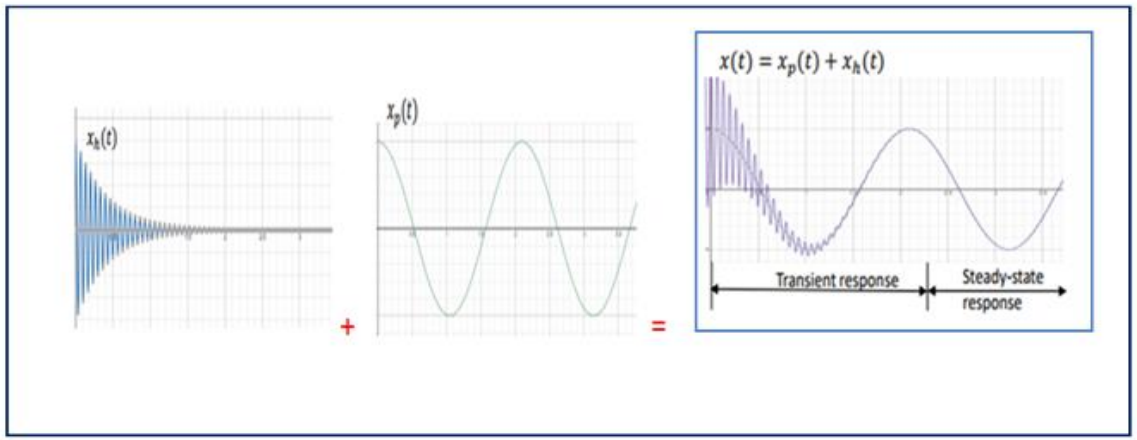

1- Equation of motion

a-External forcing

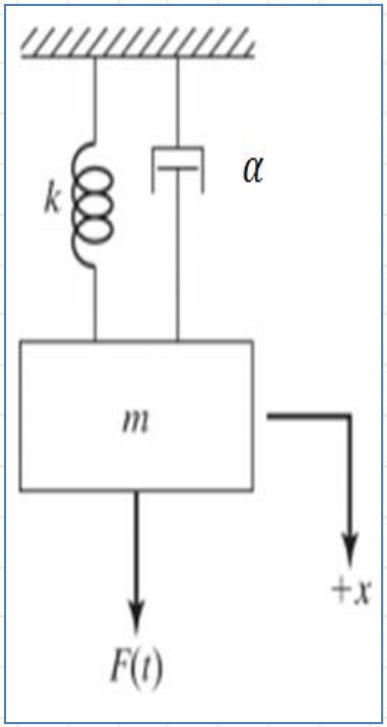

- Using complex representation

$$\ddot{x} + 2\delta\dot{x} + w_n{}^2 x = \frac{F_0}{m}\sin\Omega t$$

$$x(t) = A\sin(\Omega t + \varphi) \quad \Rightarrow \quad \overline{x(t)} = Ae^{j(\Omega t+\varphi)}$$

$$F_{ext} = F_0 \sin\Omega t \quad \Rightarrow \quad \overline{F_{ext}} = F_0 e^{j\Omega t}$$

$$\overline{x(t)} = Ae^{j(\Omega t+\varphi)}$$

$$\overline{\dot{x}(t)} = j\Omega A e^{j(\Omega t+\varphi)} = j\Omega\,\overline{x(t)}$$

$$\overline{\ddot{x}(t)} = -\Omega^2 A e^{j(\Omega t+\varphi)} = -\Omega^2\overline{x(t)}$$

1- Equation of motion

a-External forcing

$$\ddot{x} + 2\delta\dot{x} + w_n^{\,2}x = \frac{F_0}{m}\sin\Omega t \quad \Rightarrow \quad \overline{\ddot{x}(t)} + 2\delta\overline{\dot{x}(t)} + w_n^{\,2}\,\overline{x(t)} = \frac{F_0}{m}e^{j\Omega t}$$

$$\left(-\Omega^2 + 2\delta j\Omega + w_n^{\,2}\right)\overline{x(t)} = \frac{F_0}{m}e^{j\Omega t} \quad \Rightarrow \quad \left(w_n^{\,2} - \Omega^2 + 2\delta j\Omega\right)Ae^{j\varphi} = \frac{F_0}{m}$$

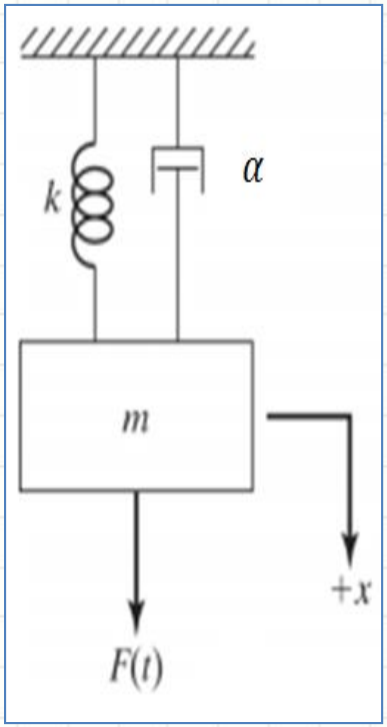

1- Equation of motion

a-External forcing

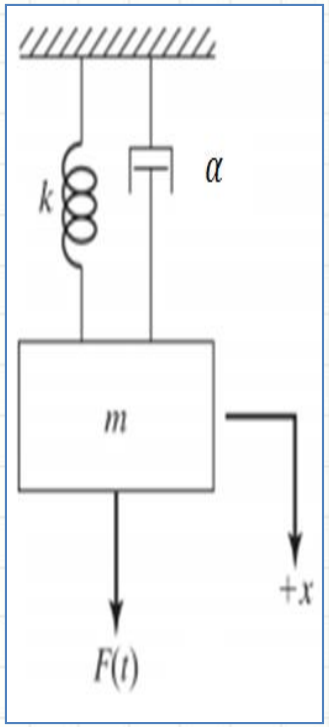

$$(-\Omega^2 + 2\delta j\Omega + w_n{}^2)\overline{x(t)} = \frac{F_0}{m}e^{j\Omega t} \quad \Rightarrow \quad (w_n{}^2 - \Omega^2 + 2\delta j\Omega)Ae^{j\varphi} = \frac{F_0}{m}$$

- ***First method***

$$(w_n{}^2 - \Omega^2 + 2j\delta\Omega)\bar{A} = \frac{F_0}{m} \qquad \text{where} \qquad \bar{A} = Ae^{j\varphi}$$

we get $\bar{A} = \dfrac{\frac{F_0}{m}}{(w_n{}^2 - \Omega^2 + 2j\delta\Omega)}$

$$\begin{cases} A = \dfrac{\frac{F_0}{m}}{\sqrt{(w_n{}^2 - \Omega^2)^2 + 4\delta^2\Omega^2}} \\ tg\varphi = \dfrac{-2\delta\Omega}{w_n{}^2 - \Omega^2} \end{cases} \quad \Rightarrow \quad x(t) = A\sin(\Omega t + \varphi)$$

- φ represent the phase difference between $x(t)$ and F_{ext}

1- Equation of motion

a-External forcing

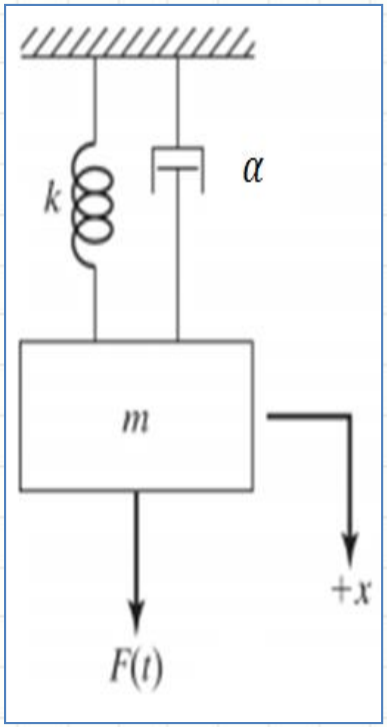

➢ ***Second method***

$$(w_n{}^2 - \Omega^2 + 2\delta j\Omega)Ae^{j\varphi} = \frac{F_0}{m} \quad \Rightarrow \quad (w_n{}^2 - \Omega^2 + 2\delta j\Omega)A = \frac{F_0}{m}\, e^{-j\varphi}$$

$$\begin{cases} (w_n{}^2 - \Omega^2)A = \frac{F_0}{m}\cos\varphi \\ 2\delta\Omega A = -\frac{F_0}{m}\sin\varphi \end{cases} \quad \Rightarrow \quad \begin{cases} A = \dfrac{\frac{F_0}{m}}{\sqrt{(w_n{}^2-\Omega^2)^2+4\delta^2\Omega^2}} \\ tg\varphi = \dfrac{-2\delta\Omega}{w_n{}^2-\Omega^2} \end{cases}$$

➢ φ represent the phase difference between $x(t)$ and F_{ext}

B- Displacement excitation (Base excitation)

1- Displacement excitation (Base excitation)

$$S(t) = s_0 sin\Omega t$$

$$T = \frac{1}{2}m\dot{x}^2 \quad , \quad U = \frac{1}{2}k(s-x)^2 \quad , \quad D = \frac{1}{2}\alpha(\dot{s} - \dot{x})^2$$

$$L = T - U \quad \Rightarrow \quad L = \frac{1}{2}m\dot{x}^2 - \frac{1}{2}k(s-x)^2$$

$$\frac{d}{dt}\left(\frac{\partial(L)}{\partial\dot{q}}\right) - \frac{\partial(L)}{\partial q} + \frac{\partial D}{\partial\dot{q}} = 0$$

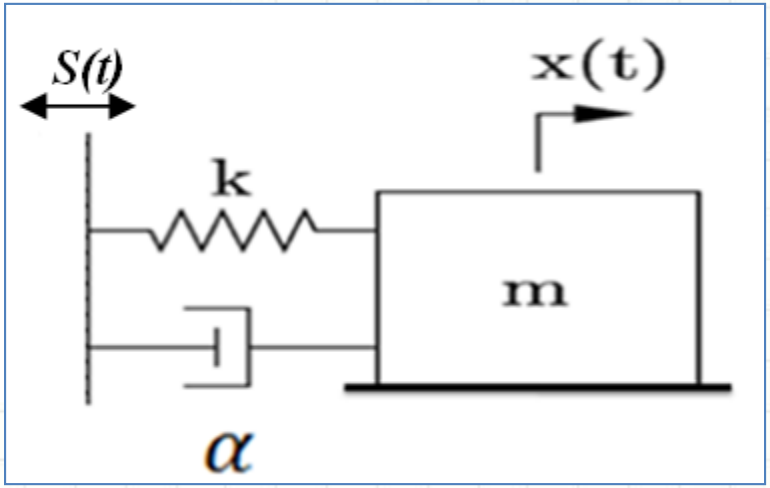

B- Displacement excitation (Base excitation)

Attention

Displacement excitation $\Rightarrow$ $$\frac{d}{dt}\left(\frac{\partial(L)}{\partial \dot{q}}\right) - \frac{\partial(L)}{\partial q} + \frac{\partial D}{\partial \dot{q}} = 0$$

$$\frac{d}{dt}\left(\frac{\partial(L)}{\partial \dot{x}}\right) - \frac{\partial(L)}{\partial x} + \frac{\partial D}{\partial \dot{x}} = 0 \quad \Rightarrow \quad m\ddot{x} - \alpha(\dot{s} - \dot{x}) - k(s - x) = 0$$

$$m\ddot{x} + \alpha\dot{x} + kx = \alpha\dot{s} + ks \quad \Rightarrow \quad m\ddot{x} + \alpha\dot{x} + kx = F_{ext}$$

$$F_{ext} = \alpha\dot{s} + ks$$

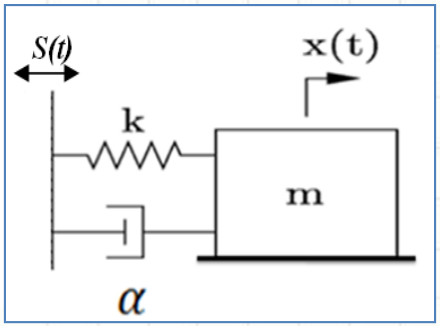

- Exitation force due to displacement excitation $F_{ext} = \alpha\dot{s} + ks$

Force Transmitted to the base : $F_{ext} = \alpha\dot{s} + ks$

We put $Z = x - s$

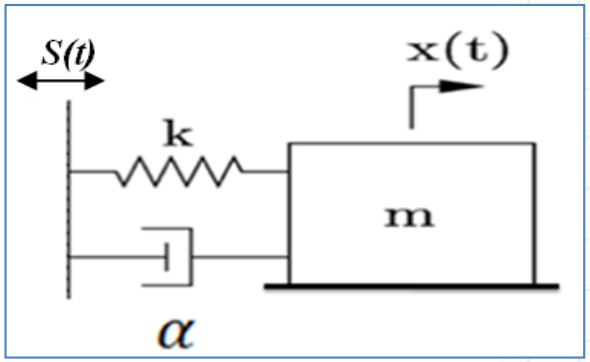

$$m\ddot{x} - \alpha(\dot{s} - \dot{x}) - k(s - x) = 0 \quad \Rightarrow \quad m\ddot{z} + \alpha\dot{z} + kz = -m\ddot{s}$$

$$\Rightarrow \quad m\ddot{z} + \alpha\dot{z} + kz = ms_0\Omega^2 sin\Omega t$$

$m\ddot{z} + \alpha\dot{z} + kz = F(t)$ Where $F(t) = F_0 sin\Omega t$; $F_0 = ms_0\Omega^2$

$m\ddot{z} + \alpha\dot{z} + kz = F(t)$ *it resomble to* $m\ddot{x} + \alpha\dot{x} + kx = F_{ext}$ *case of exitation forcing*

$$\ddot{z} + \frac{\alpha}{m}\dot{z} + \frac{k}{m}z = \frac{F_{ext}}{m} \quad \Rightarrow \quad \ddot{z} + 2\delta\dot{z} + {w_n}^2 z = \frac{F_{ext}}{m}$$

$$\Rightarrow \quad \ddot{z} + 2\delta\dot{z} + {w_n}^2 z = s_0\Omega^2 sin\Omega t$$

B- Displacement excitation (Base excitation)

- General solution $z(t) = z_h(t) + z_p(t)$

$z(t) \approx z_p(t) \quad \Rightarrow \quad z(t) = A\sin(\Omega t + \varphi)$

- We use the same steps applied in the first case to find the expression of $z(t)$

We get $\begin{cases} A_{Exitation\ forcing} = \dfrac{\frac{F_0}{m}}{\sqrt{(w_n{}^2-\Omega^2)^2+4\delta^2\Omega^2}} \\ tg\varphi = \dfrac{-2\delta\Omega}{w_n{}^2-\Omega^2} \end{cases} \Rightarrow \begin{cases} A_{\text{Displacement excitation}} = \dfrac{s_0\Omega^2}{\sqrt{(w_n{}^2-\Omega^2)^2+4\delta^2\Omega^2}} \\ tg\varphi = \dfrac{-2\delta\Omega}{w_n{}^2-\Omega^2} \end{cases}$

We have $z(t) = x(t) - s(t) \quad \Rightarrow \quad x(t) = z(t) - s(t)$

B- Displacement excitation (Base excitation)

Note

We can start from equation:

$$m\ddot{x} + \alpha\dot{x} + kx = \alpha\dot{s} + ks \qquad \Rightarrow \qquad \ddot{x} + \frac{\alpha}{m}\dot{x} + \frac{k}{m}x = \frac{\alpha}{m}\dot{s} + \frac{k}{m}s$$

$$\ddot{x} + 2\delta\dot{x} + {w_n}^2 x = 2\delta\dot{s} + {w_n}^2 s$$

$$\ddot{x} + \alpha\dot{x} + kx = 2\delta\Omega s_0 cos\Omega t + {w_n}^2 s_0 sin\Omega t$$

And using complex representation to determinate $x(t)$

3-Unbalanced rotating (Rotor excitation)

Consider a mass spring damper system constrained to move in vertical direction and exited by rotating machine, which is unbalanced, the mass of the machine is M. The unbalance of mass m and eccentricity e *rotates with an angular velocity* Ω

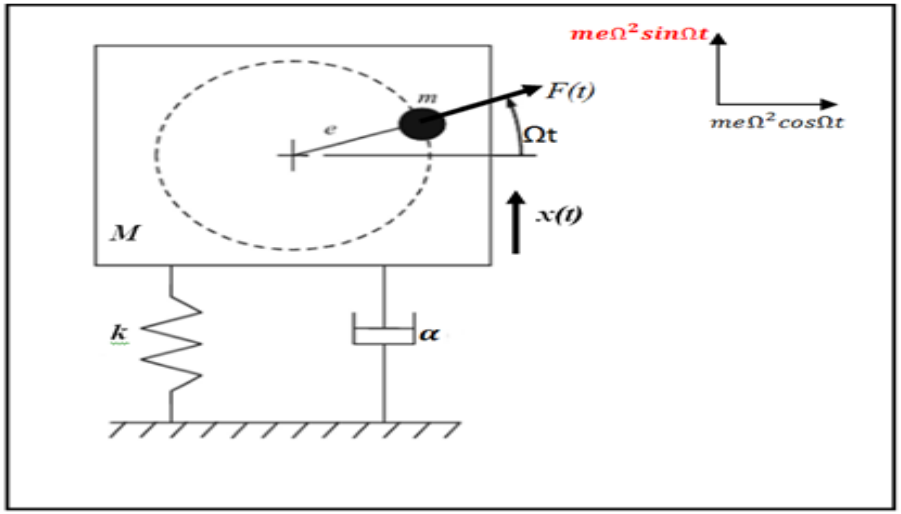

- Centrifugal force $\vec{F}(t) = me\Omega^2\vec{u}$
- Rotation angle $\theta(t) = \Omega t$

- The center of mass does not coincide with the axis of rotation in an unbalanced system. In this case, the mass distribution is irregular. This creates asymmetric centrifugal forces that are not aligned with the axis of rotation, leading to vibrations.

3-Unbalanced rotating (Rotor excitation)

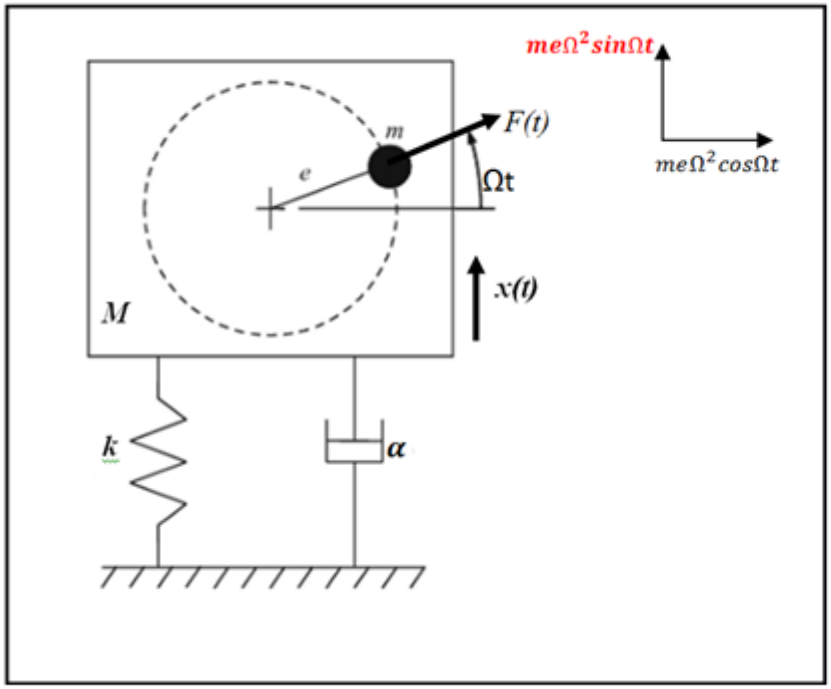

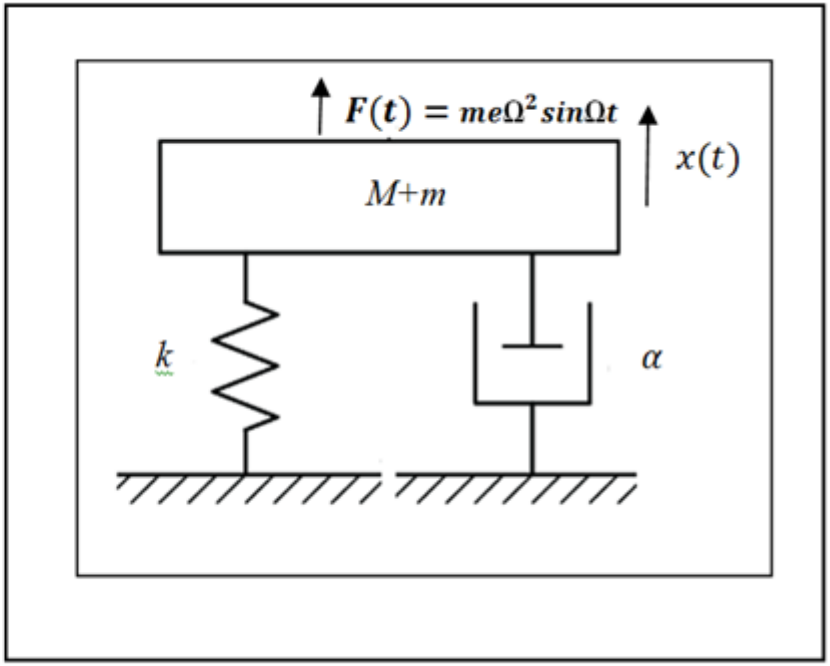

3-Unbalanced rotating (Rotor excitation)

➢Vertical direction

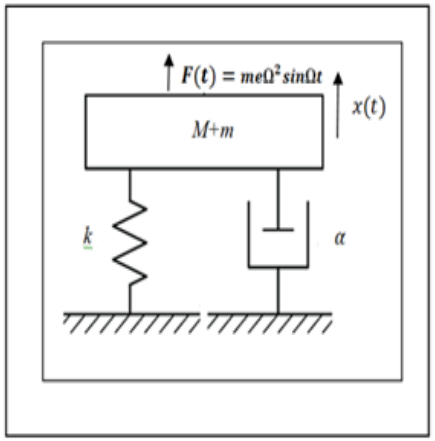

$$F_{ext} = F_c = me\Omega^2 sin\Omega t$$

$$T = \frac{1}{2}(M+m)\dot{x}^2 \quad , \quad U = \frac{1}{2}kx^2 + cte \quad , \quad D = \frac{1}{2}\alpha\dot{x}^2$$

$$L = T - U \quad \Rightarrow \quad L = \frac{1}{2}(M+m)\dot{x}^2 - \frac{1}{2}kx^2$$

➢ $\frac{d}{dt}\left(\frac{\partial(L)}{\partial\dot{q}}\right) - \frac{\partial(L)}{\partial q} + \frac{\partial D}{\partial\dot{q}} = F_{eq}$ Where $F_{eq} = \vec{F}_{ext}\cdot\frac{\partial\vec{r}}{\partial q}$

$$\frac{d}{dt}\left(\frac{\partial(L)}{\partial\dot{q}}\right) - \frac{\partial(L)}{\partial q} + \frac{\partial D}{\partial\dot{q}} = \vec{F}_{ext}\cdot\frac{\partial\vec{r}}{\partial q} \quad \Rightarrow \quad \frac{d}{dt}\left(\frac{\partial(L)}{\partial\dot{x}}\right) - \frac{\partial(L)}{\partial x} + \frac{\partial D}{\partial\dot{x}} = \vec{F}_{ext}\cdot\frac{\partial\vec{r}}{\partial x}$$

3-Unbalanced rotating (Rotor excitation)

$$\Rightarrow \quad \frac{d}{dt}\left(\frac{\partial(L)}{\partial \dot{x}}\right) - \frac{\partial(L)}{\partial x} + \frac{\partial D}{\partial \dot{x}} = F_{ext} \qquad \Rightarrow \quad (M+m)\ddot{x} + \alpha\dot{x} + kx = me\Omega^2 sin\Omega t$$

$$\ddot{x} + \frac{\alpha}{M+m}\dot{x} + \frac{k}{M+m}x = \frac{me\Omega^2}{M+m}\sin\Omega t \qquad \Rightarrow \quad \ddot{x} + 2\delta\dot{x} + {w_n}^2 x = \frac{me\Omega^2}{M+m}\sin\Omega t$$

➢Vertical direction

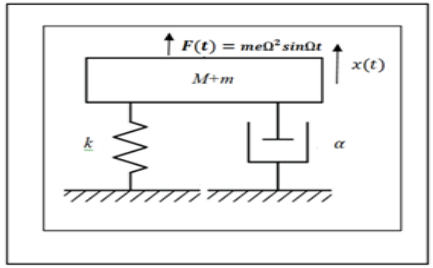

Where:

$\omega_n = \sqrt{\frac{k}{M+m}}$ Natural frequency of the system.

$\delta = \frac{\alpha}{M+m}$ Damping factor

$$(M+m)\ddot{x} + \alpha\dot{x} + kx = me\Omega^2 sin\Omega t \qquad it\ resomble\ to \qquad m\ddot{x} + \alpha\dot{x} + kx = F_{ext}$$

case of exitation forcing

3-Unbalanced rotating (Rotor excitation)

➢Vertical direction

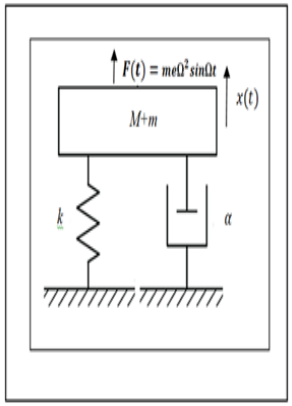

General solution $x(t) = x_h\,(t) + x_p(t)$

$$x(t) \approx x_p(t) \quad \Rightarrow \quad x(t) = A\sin(\Omega t + \varphi)$$

We use the same steps applied in the first case to find the expression of $x(t)$

We get
$$\begin{cases} A_{Exitation\ forcing} = \dfrac{\frac{F_0}{m}}{\sqrt{(w_n{}^2-\Omega^2)^2+4\delta^2\Omega^2}} \\ tg\varphi = \dfrac{-2\delta\Omega}{w_n{}^2-\Omega^2} \end{cases} \Rightarrow \begin{cases} A_{\text{Unbalanced rotating}} = \dfrac{\frac{me\Omega}{(M+m)}}{\sqrt{(w_n{}^2-\Omega^2)^2+4\delta^2\Omega^2}} \\ tg\varphi = \dfrac{-2\delta\Omega}{w_n{}^2-\Omega^2} \end{cases}$$

3- Resonance

- Resonance is a physical phenomenon that occurs when an oscillating or vibrating system is subjected to a periodic excitation whose frequency coincides with its natural frequency. In this condition, the amplitude of the system's oscillations increases significantly, often reaching maximum levels.
- The maximum amplitude is obtained at the value of Ω that eliminates $\frac{dA}{d\Omega}$

$$\begin{cases} A = \dfrac{\frac{F_0}{m}}{\sqrt{({w_n}^2 - \Omega^2)^2 + 4\delta^2\Omega^2}} \\ tg\varphi = \dfrac{-2\delta\Omega}{{w_n}^2 - \Omega^2} \qquad \varphi = -arctg\dfrac{2\delta\Omega}{{w_n}^2 - \Omega^2} \end{cases}$$

3- Resonance

$$\frac{dA}{d\Omega} = 0 \qquad for \qquad \Omega = \Omega_R$$

$$\frac{dA}{d\Omega} = 0 \qquad \Rightarrow \qquad \frac{d}{d\Omega}\left(\frac{\frac{F_0}{m}}{\sqrt{(w_n{}^2 - \Omega^2)^2 + 4\delta^2\Omega^2}}\right) = 0$$

- We put $A_0 = \frac{F_0}{m}$

$\Omega_R = \sqrt{w_n{}^2 - 2\delta^2}$ Resonance frequency

- Replacing Ω_R in the amplitude gives: $A = \frac{A_0}{2\delta\sqrt{(w_n{}^2 - \delta^2}}$
- There is a maximum at the angular frequency Ω_R only if the damping is low, such that $\delta < \sqrt{2w_n}$.

3- Resonance

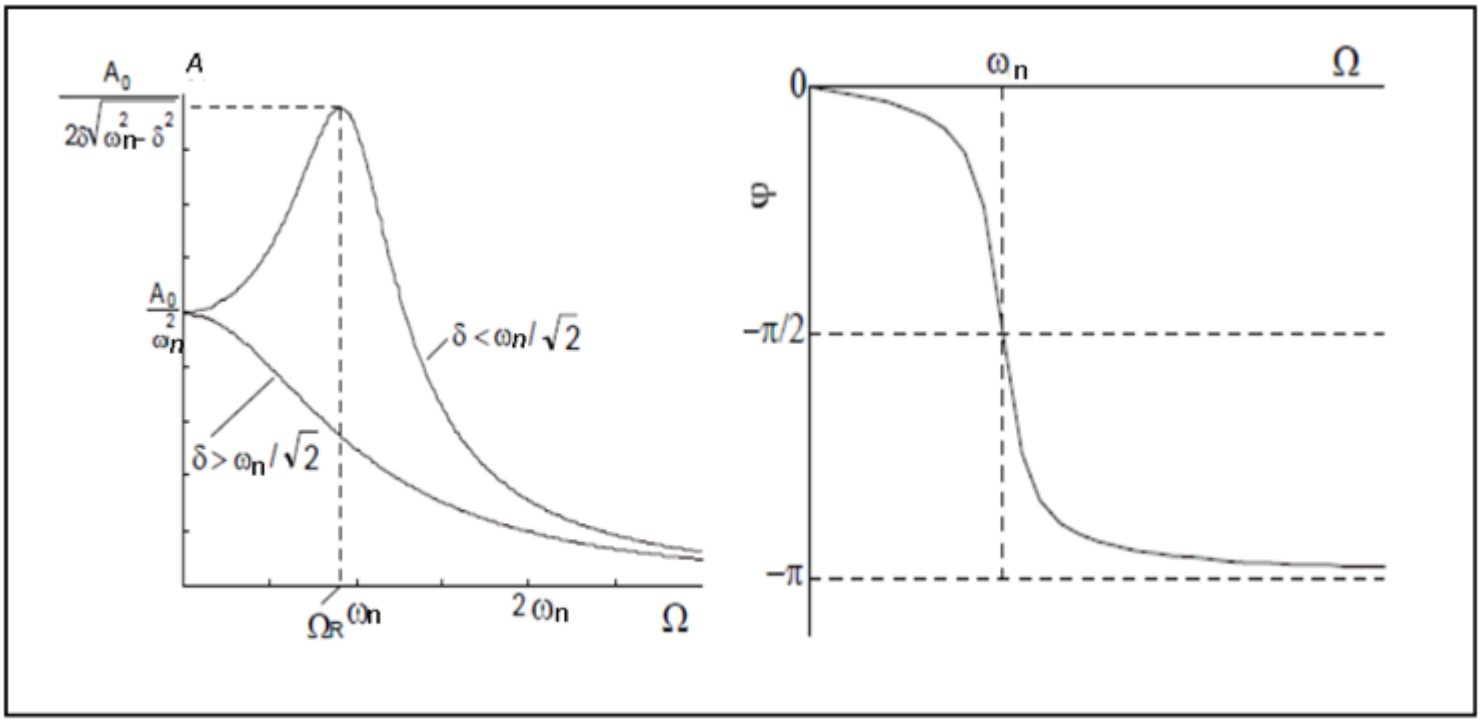

Amplitude and phase shift as a function of Ω

3- Resonance

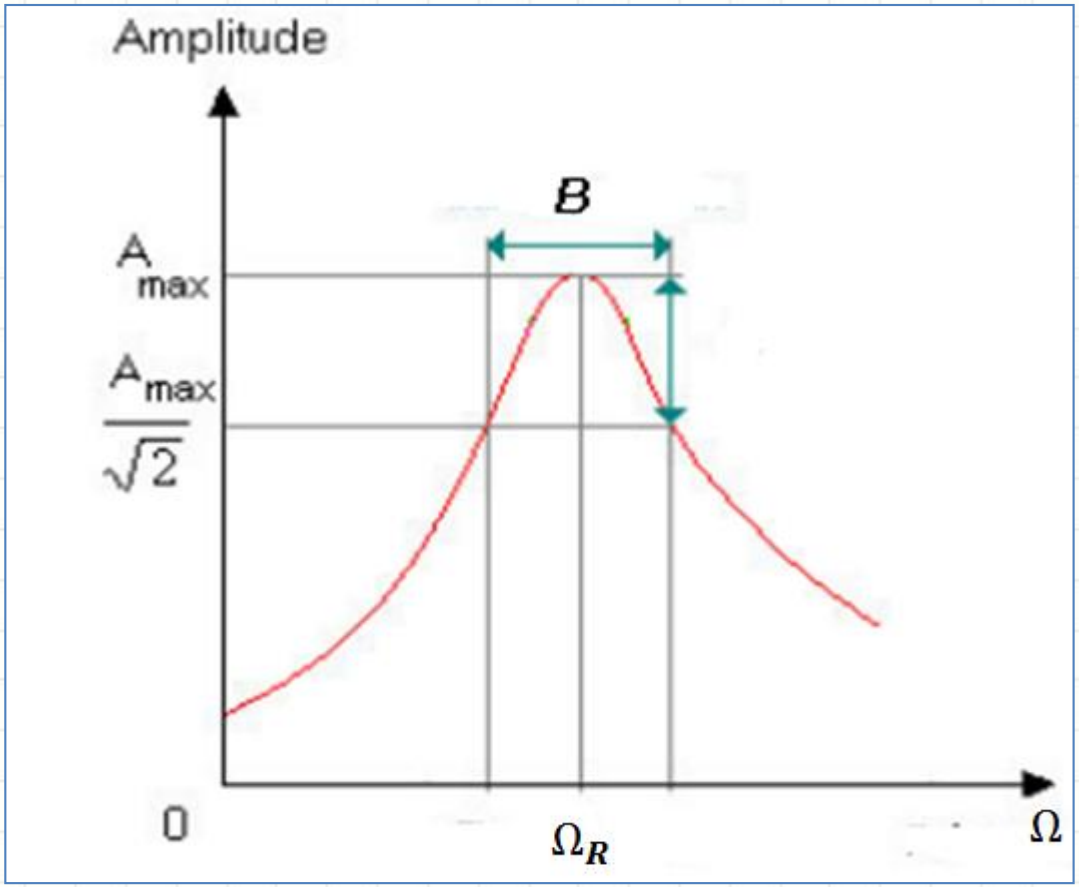

3- Resonance

Note

1- $\ddot{x} + 2\delta\dot{x} + {w_n}^2 x = A_0 \sin\Omega t \quad \Rightarrow \quad A = \frac{A_0}{\sqrt{({w_n}^2 - \Omega^2)^2 + 4\delta^2\Omega^2}} \quad \Rightarrow \quad \Omega_R = \sqrt{{w_n}^2 - 2\delta^2}$

2- $\ddot{x} + 2\delta\dot{x} + {w_n}^2 x = A_0\Omega \sin\Omega t \quad \Rightarrow \quad A = \frac{A_0\Omega}{\sqrt{({w_n}^2 - \Omega^2)^2 + 4\delta^2\Omega^2}} \quad \Rightarrow \quad \Omega_R = w_n$

3- $\ddot{x} + 2\delta\dot{x} + {w_n}^2 x = A_0\,\Omega^2 \sin\Omega t \quad \Rightarrow \quad A = \frac{A_0\Omega^2}{\sqrt{({w_n}^2 - \Omega^2)^2 + 4\delta^2\Omega^2}} \quad \Rightarrow \quad \Omega_R = \frac{{w_n}^2}{\sqrt{{w_n}^2 - 2\delta^2}}$

If $\delta \ll w_n \quad \Rightarrow \quad \Omega_R = \frac{{w_n}^2}{\sqrt{{w_n}^2 - 2\delta^2}} \approx w_n$ (see exercise 1 of set 4)

4- Power supplied and Power absorbed

a- Average power supplied by the excitation force

$$\langle P \rangle = \frac{1}{T}\int_0^T P(t)dt$$

$$P_{Supp}(t) = \vec{F}_{ext}.\vec{v} \quad \Rightarrow \quad P_{Supp}(t) = F_0 \sin\Omega t\,.\dot{x}(t) \quad \Rightarrow \quad P_{Supp}(t) = F_0 A\,\Omega\, cos(\Omega t + \varphi)\sin\Omega t$$

$$\Rightarrow \langle P_{Supp} \rangle = \frac{1}{T}\int_0^T F_0 A\,\Omega\, cos(\Omega t + \varphi)\sin\Omega t\, dt$$

$$sina + sinb = 2sin\frac{a+b}{2}.cos\,\frac{a-b}{2} \qquad \begin{cases} a - b = 2(\Omega t + \varphi) \\ a + b = 2\Omega t \end{cases} \quad \Rightarrow \quad \begin{cases} a = 2\Omega t + \varphi \\ b = \varphi \end{cases}$$

4- Power supplied and Power absorbed

$$\Rightarrow \quad \langle P_{Supp} \rangle = \frac{1}{2T} F_0 A\, \Omega \int_0^T (\, sin(2\Omega t + \varphi) + sin\varphi) dt$$

$$\Rightarrow \langle \boldsymbol{P_{Supp}} \rangle = \frac{\mathbf{1}}{\mathbf{2T}} F_0 A\, \Omega \left[\int_0^T (\, \boldsymbol{sin}(\mathbf{2}\Omega t + \varphi)\, dt + \int_0^T \boldsymbol{sin}\varphi) dt \right] = \frac{\mathbf{1}}{\mathbf{2T}} F_0 A\, \Omega \left[\int_0^T \boldsymbol{sin}\varphi) dt \right]$$

$\int_0^T (\, \boldsymbol{sin}(\mathbf{2}\Omega t + \varphi)) dt = 0$ See set0 exercise 3

$$\Rightarrow \qquad \langle \boldsymbol{P_{Supp}} \rangle = \frac{\mathbf{1}}{\mathbf{2T}} F_0 A\, \Omega\, T sin\varphi \ldots\ldots\ldots\ldots (1)$$

4- Power supplied and Power absorbed

$$\Rightarrow \qquad \langle P_{Supp} \rangle = \frac{1}{2T} F_0 A\, \Omega\, T \sin\varphi \ldots\ldots\ldots\ldots (1)$$

We have $\begin{cases} ({w_n}^2 - \Omega^2)A = \frac{F_0}{m} \cos\varphi \\ 2\delta\Omega A = -\frac{F_0}{m} \sin\varphi \end{cases}$ $\Rightarrow \quad \sin\varphi = \frac{2\delta\Omega A m}{F_0}$ and $\delta = \frac{\alpha}{2m}$

$$\Rightarrow \quad \langle P_{Supp} \rangle = \frac{1}{2} \alpha A^2 \Omega^2$$

4- Power supplied and Power absorbed

b- Average power absorbed by the damper.

$$P_{abs}(t) = \vec{F}_{\alpha}.\vec{v} \quad \Rightarrow \quad P_{abs}(t) = \alpha v.v \quad \Rightarrow \quad P_{abs}(t) = \alpha v^2$$

$$P_{abs}(t) = 2D$$

$$P_{abs}(t) = \alpha \dot{x}^2 \quad \Rightarrow \quad P_{abs}(t) = \alpha A^2\,\Omega^2\,cos^2(\Omega t + \varphi)$$

$$\langle P_{abs}\rangle = \frac{1}{T}\int_0^T \alpha A^2\,\Omega^2\,cos^2(\Omega t + \varphi)\,dt \quad \Rightarrow \quad \langle P_{abs}\rangle = \frac{1}{T}\alpha A^2\,\Omega^2\int_0^T cos^2(\Omega t + \varphi)\,dt$$

4- Power supplied and Power absorbed

We have $\frac{1}{T}\int_0^T cos^2(\Omega t+\varphi)\,dt = \frac{1}{2}$

$$\Rightarrow \quad \langle P_{\text{abs}}\rangle = \frac{1}{2}\alpha A^2\,\Omega^2$$

$\langle P_{\text{abs}}\rangle = \langle P_{\text{Supp}}\rangle$ **But** $P_{\text{abs}}(t) \neq P_{\text{Supp}}(t)$

4- Power supplied and Power absorbed

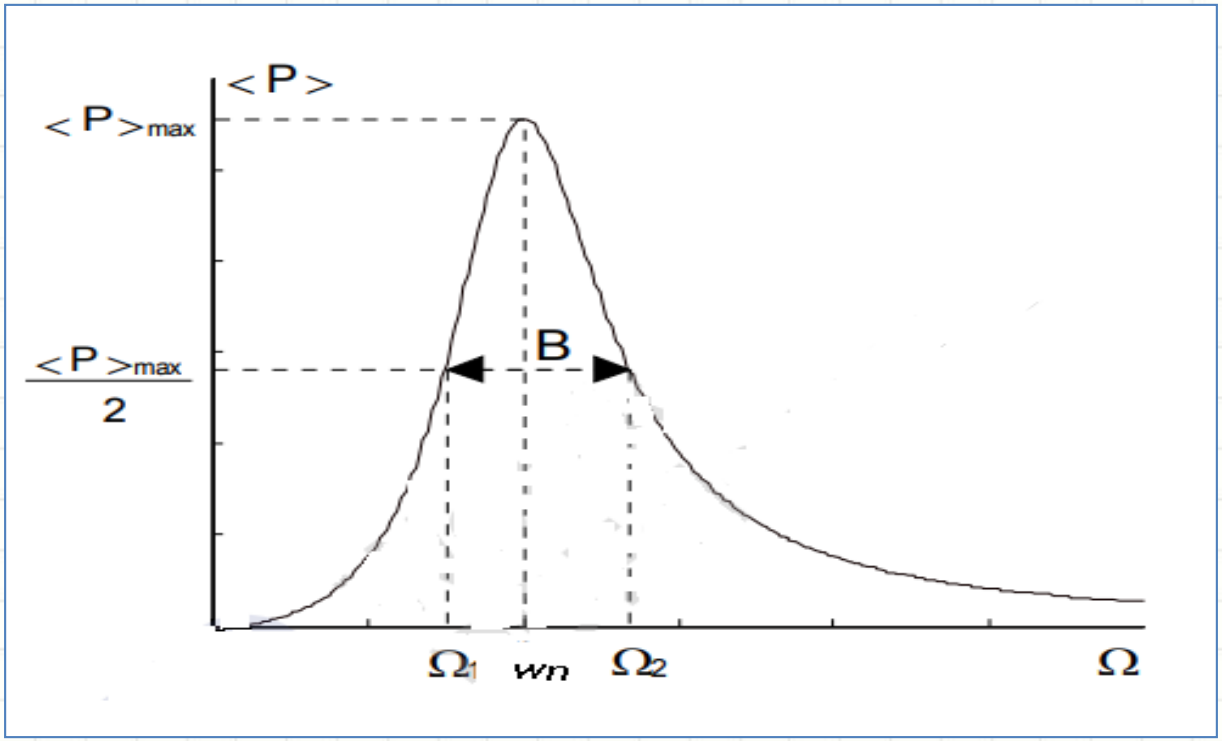

Power as a function of Ω